Dart Aerospace Ltd.

Date: Wednesday, 12/20/2006 1:47:32 PM
User: Kim Johnston

Process Sheet

Customer	: CU-DAR001 Dart Helicopters Services	**Drawing Name**	: LUG
Job Number	: 30056		
Estimate Number	: 10008		
P.O. Number	: N/A	**Part Number**	: D2591
This Issue	: 12/20/2006 **S.O. No.** : N/A	**Drawing Number**	: D2591 REV D
Prsht Rev.	: NC	**Project Number**	: N/A
First Issue	: N/A **Type** : MACHINED PARTS	**Drawing Revision**	: D
Previous Run	: 29811	**Material**	: N/A
Written By	:	**Due Date**	: 1/5/2007 **Qty:** 50 **Um:** Each
Checked & Approved By	: 061220		
Comment	: Est Rev:I Removed from 9 Digit 05-10-25 JLM		

Additional Product

Job Number:

Seq. #:	Machine Or Operation:	Description :	
1.0	M1010B0750X02500	ASTM A21 Steel .75"x2.5"	
	Comment: Qty.: 0.2340 f(s)/Unit Total : 11.7000 f(s) ASTM A36 Steel bar 2.50" x 0.75" thick(M1010-B0.750X02.500) Batch: M 103069	07/01/07	50
2.0	BAND SAW	BAND SAW	
	Comment: BAND SAW Cut blanks: 2.700" long	07/01/07	50
3.0	HAAS1	HAAS CNC VERTICAL MACHINING #1	
	Comment: HAAS CNC VERTICAL MACHINING #1 1- Machine as per Folio FA 039 and Dwg D2591 2-Deburr if required	J.F. 07/01/29	50
4.0	QC2	INSPECT PARTS AS THEY COME OFF MACHINE	
	Comment: INSPECT PARTS AS THEY COME OFF MACHINE	J.F. 07/01/29 / S.F 07/01/30	50
5.0	QC8	SECOND CHECK	
	Comment: SECOND CHECK	MS 07/01/31	50

Form: rprocess

Dart Aerospace Ltd

W/O:		WORK ORDER CHANGES					
DATE	STEP	PROCEDURE CHANGE	By	Date	Qty	Approval Chief Eng / Prod Mgr	Approval QC Inspector

Part No: _____ **PAR #:** _____ **Fault Category:** _____ **NCR:** Yes (No) **DQA:** LP **Date:** 07/02/05

QA: N/C Closed: _____ **Date:** _____

NCR:		WORK ORDER NON-CONFORMANCE (NCR)						
DATE	STEP	Description of NC Section A	Corrective Action Section B			Verification Section C	Approval Chief Eng	Approval QC Inspector
			Initial Chief Eng	Action Description Chief Eng	Sign & Date			

NOTE: Date & initial all entries

Date: Wednesday, 12/20/2006 1:47:33 PM
User: Kim Johnston

Process Sheet

Customer: CU-DAR001 Dart Helicopters Services **Drawing Name:** LUG

Job Number: 30056 **Part Number:** D2591

Job Number:

Seq. #:	Machine Or Operation:	Description :
6.0	PACKAGING 1	PACKAGING RESOURCE #1

Comment: PACKAGING RESOURCE #1
Identify and Stock
Location:_____ WELDING

7/02/01

7.0	QC21	FINAL INSPECTION/W/O RELEASE

50

Comment: FINAL INSPECTION/W/O RELEASE

07/02/05

Job Completion

U 07-02-02

Form: rprocess

Dart Aerospace Ltd

W/O:		WORK ORDER CHANGES					
DATE	STEP	PROCEDURE CHANGE	By	Date	Qty	Approval Chief Eng / Prod Mgr	Approval QC Inspector

Part No: _____ **PAR #:** _____ **Fault Category:** _____ **NCR:** Yes No **DQA:** _____ **Date:** _____

QA: N/C Closed: _____ **Date:** _____

NCR:		WORK ORDER NON-CONFORMANCE (NCR)						
DATE	STEP	Description of NC Section A	Corrective Action Section B			Verification Section C	Approval Chief Eng	Approval QC Inspector
			Initial Chief Eng	Action Description Chief Eng	Sign & Date			

NOTE: Date & initial all entries

DART AEROSPACE LTD	Work Order:	30056
Description: GHW Lug	Part Number:	D2591
Inspection Dwg: D2591 **Rev:** D		Page 1 of 1

FIRST ARTICLE INSPECTION CHECKLIST

[X] First Article [ ] Prototype

Drawing Dimension	Tolerance	Actual Dimension	Accept	Reject	Method of Inspection	Comments
1.20	+/-0.030	1.203"	✓			
Ø0.510	+/-0.010	Ø.510"	✓			
0.125	+/-0.010	.125"	✓			
2.44	+/-0.030	2.440"	✓			
0.65	+/-0.030	.653"	✓			
0.50	+/-0.030	.500"	✓			

Measured by:	J.F.	Audited by:	SD	Prototype Approval:	N/A
Date:	07/01/29	Date:	07.01.29	Date:	N/A

Rev	Date	Change		Revised by	Approved
A	04.08.12	New Issue	P/O D205-641-011 & DSI 9161-011	KJ/JLM	

DESIGN	DRAWN BY	DART AEROSPACE LTD VICTORIA INTERNATIONAL AIRPORT, CANADA	
CHECKED KE	APPROVED BW	DRAWING NO. D2591	REV. D SHEET 1 OF 1
DATE 98.01.21		TITLE GHW LUG	SCALE 1:1

A	96:09:16	NEW ISSUE
B	97:06:17	RE-DESIGN TO FLAT BOTTOM
C	97.12.12	RE-DESIGN TO RADIUS BOTTOM
D	98.01.21	0.125 FLAT WAS 0.067 FLAT

RELEASED 98.01.21 DS

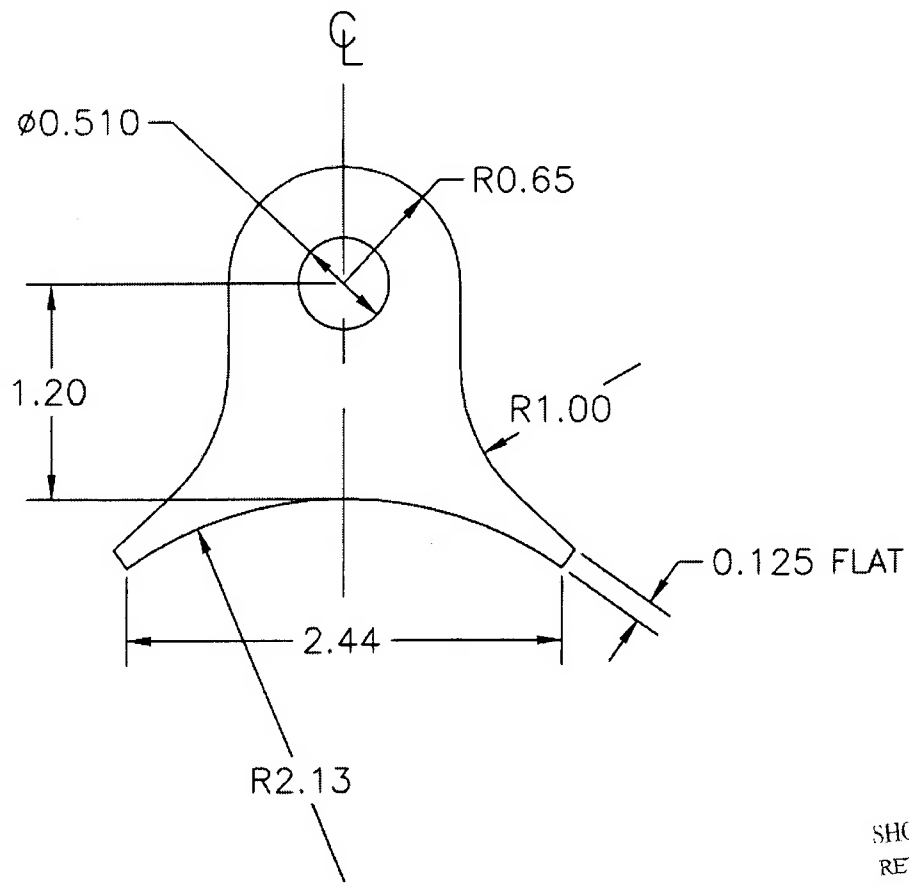

SHOP COPY
RETURN TO
ENGINEERING
UNCONTROLLED COPY
SUBJECT TO AMENDMENT
WITHOUT NOTICE
WORK ORDER
NO. 30056

00.04.05

BREAK ALL SHARP CORNERS ~~0.010 TO 0.020~~ 0.063
MATERIAL: ASTM A36 STEEL 0.50 THICK
TOLERANCES ARE PER DART QSI 018 UNLESS OTHERWISE NOTED
PART IS SYMMETRIC ABOUT CENTER-LINE
ALL DIMENSIONS ARE IN INCHES